Main Product Characteristics

I_D	4A
V_{DSS}	650V
$P_D(T_C=25^oC)$	75W
$R_{DS(ON)Typ}$	2.3Ω

■ Outline

TO-251

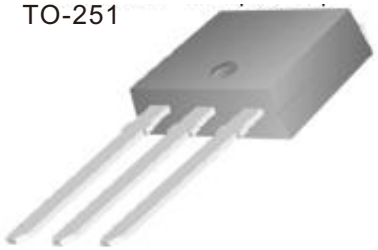

1 2 3

1.Gate 2.Drain 3.Source

■ Features

- Fast switching.
- ESD improved capability.
- Low gate charge. (Typical Data:13nC)
- Low reverse transfer capacitances.(Typical:2.2pF)
- 100% single pulse avalanche energy test.

■ Application

- Power switch circuit of adaptor and charger.

■ Mechanical data

- Epoxy:UL94-V0 rated flame retardant
- Case : JEDEC TO-251 molded plastic body over passivated chip
- Lead : Axial leads, solderable per MIL-STD-202, Method 208 guranteed.

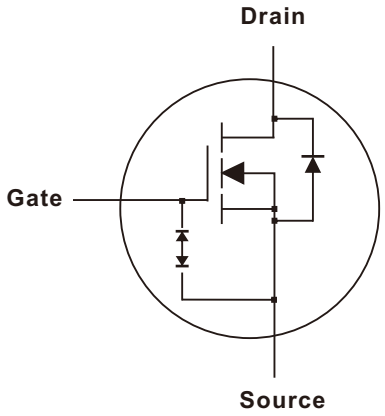

Inner Equivalent principium Chart

■ Absolute(T_C = 25°C unless otherwise specified)

PARAMETER	CONDITIONS	Symbol	MHU04N65	UNIT
Drain-Source Voltage		V_{DSS}	650	V
Continuous Drain Current		I_D	4	A
Continuous Drain Current	T_C = 100°C		3.2	
Pulsed Drain Current(Note:1)		I_{DM}	16	
Gate-Source Voltage		V_{GS}	±30	V
Single Pulse Avalanche Energy(Note:2)		E_{AS}	150	mJ
Avalanche Current(Note:1)		I_{AR}	2.5	A
Repetitive Avalanche Energy(Note:1)		E_{AR}	30	mJ
Power Dissipation	Power Dissipation	P_D	75	W
	Derating factor above 25°C		0.6	W/°C
Peak Diode Recovery dv/dt(Note:3)		dV/dt	5.0	V/ns
Gate source ESD	HBM-C = 100pF, R = 1.5kΩ	$V_{ESD(G-S)}$	3000	V
Operating Junction and Storage Temperature Range		T_J, T_{STG}	150,-55 ~ +150	°C
Maximum temperature for soldering		T_L	300	°C

NOTE : 1.Repetitive rating; pulse width limited by maximum junction temperature.
2.L=10.0mH, I_D = 5.5A, Start T_J = 25°C.
3.I_{SD} =4A,di/dt ≤100A/us, V_{DD}≤BV_{DS}, Start T_J = 25°C.

Document ID : DS-22M76
Revised Date : 2015/08/24
Revision : C

■ Electrical characteristics(T_C = 25°C unless otherwise specified)

■ OFF Characteristics

PARAMETER	CONDITIONS	Symbol	MIN.	TYP.	MAX.	UNIT
Drain-Source Breakdown Voltage	V_{GS} = 0V, I_D = 250μA	V_{DSS}	650			V
Bvdss Temperature Coefficient	I_D = 250μA, Reference 25°C	$\Delta BV_{DSS}/\Delta T_J$		0.67		V/°C
Drain-Source Leakage Current	V_{DS} = 650V, V_{GS} = 0V, T_a = 25°C	I_{DSS}			1	μA
	V_{DS} = 520V, V_{GS} = 0V, T_a = 125°C				100	
Gate to Source Forward Leakage	V_{GS} = +20V	$I_{GSS(F)}$			10	
Gate to Source Reverse Leakage	V_{GS} = -20V	$I_{GSS(R)}$			-10	

■ ON Characteristics

PARAMETER	CONDITIONS	Symbol	MIN.	TYP.	MAX.	UNIT
Gate Threshold Voltage	V_{DS} = V_{GS}, I_D = 250μA	$V_{GS(th)}$	2.0		4.0	V
Drain-to-Source On-Resistance	V_{GS} = 10V, I_D = 2A	$R_{DS(on)}$		2.3	2.8	Ω

Pulse Width tp≤300μs,δ≤2%

■ Dynamic Characteristics

PARAMETER	CONDITIONS	Symbol	MIN.	TYP.	MAX.	UNIT
Forward Trans conductance	V_{DS} = 15V, I_D = 2A	g_{fs}		3.5		S
Input Capacitance	V_{DS} = 25V, V_{GS} = 0V, f = 1.0MHz	C_{iss}		560		pF
Output Capacitance		C_{oss}		50		
Reverse Transfer Capacitance		C_{rss}		2.2		

■ Resistive Switching Characteristics

PARAMETER	CONDITIONS	Symbol	MIN.	TYP.	MAX.	UNIT
Turn-on Delay Time	I_D = 4A, V_{DD} = 325V, R_G = 10Ω	$td_{(ON)}$		14		ns
Rise Time		tr		22		
Turn-off Delay Time		$td_{(OFF)}$		29		
Fail Time		tf		15		
Total Gate Charge	I_D = 4A, V_{DD} = 520V, V_{GS} = 10V	Q_g		13		nC
Gate-Source Charge		Q_{gs}		2.7		
Gate-Drain ("Miller") Charge		Q_{gd}		5.5		

■ Source-Drain Diode Characteristics

PARAMETER	CONDITIONS	Symbol	MIN.	TYP.	MAX.	UNIT
Continuous Source Current	Boby Diode	I_S			4	A
Maximum Pulse Current	Boby Diode	I_{SM}			16	
Diode Forward Voltage	I_S = 4.0A, V_{GS} = 0V	V_{SD}			1.5	V
Reverse recovery time	I_S = 4A, T_J = 25°C, dI_F/dt = 100A/μs, V_{GS} = 0V	t_{rr}		250		ns
Reverse recovery charge		Q_{rr}		1200		nC

Pulse Width tp≤380μs,δ≤2%

■ Thermal characteristics

PARAMETER	CONDITIONS	Symbol	MIN.	TYP.	MAX.	UNIT
Thermal Resistance	Junction to Case	$R_{\theta JC}$		1.67		°C/W
	Junction to Ambient	$R_{\theta JA}$		62.5		

■ Gate-source Zener Diode

PARAMETER	CONDITIONS	Symbol	MIN.	TYP.	MAX.	UNIT
Gate-Source Breakdown Voltage	I_{GS} = ±1mA(open Drain)	V_{GSO}	30			V

■ Rating and characteristic curves

Fig.1- Maximum Forward Bias Safe Operating Area

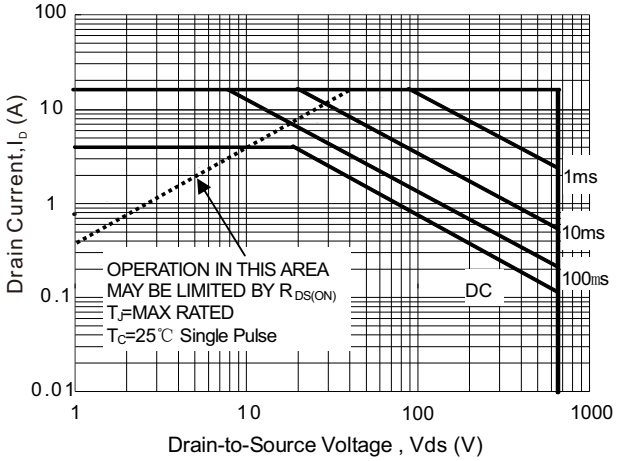

Fig.2- Maximum Power Dissipation vs Case Temperature

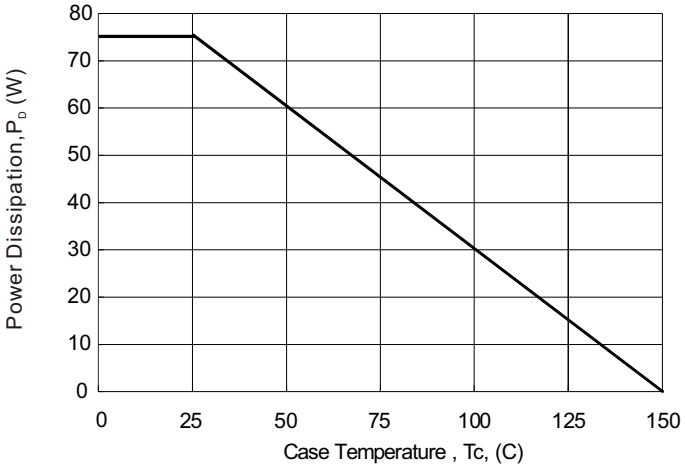

Fig.3- Maximum Continuous Drain Current VS Case Temperaure

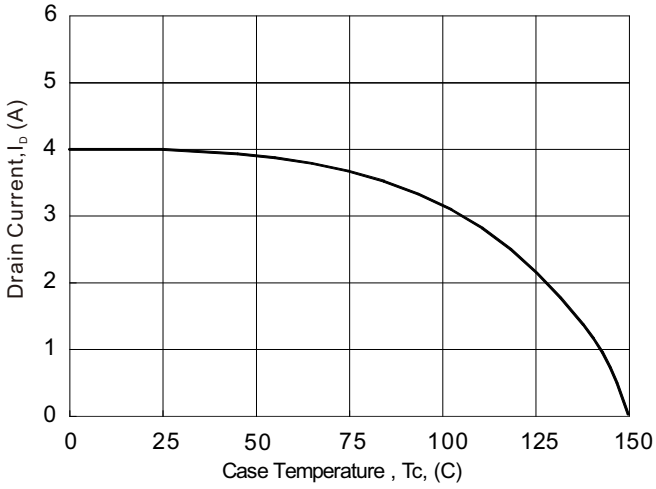

Fig.4- Typical Output Characteristics

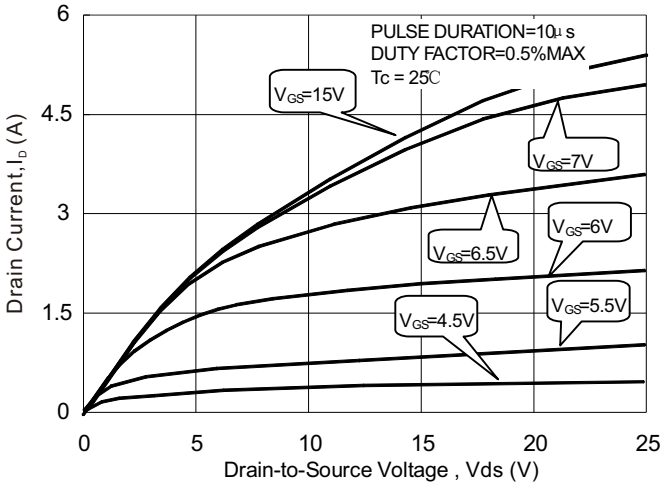

Fig.5- Maximum Effective Thermal Impendence, Junction to Case

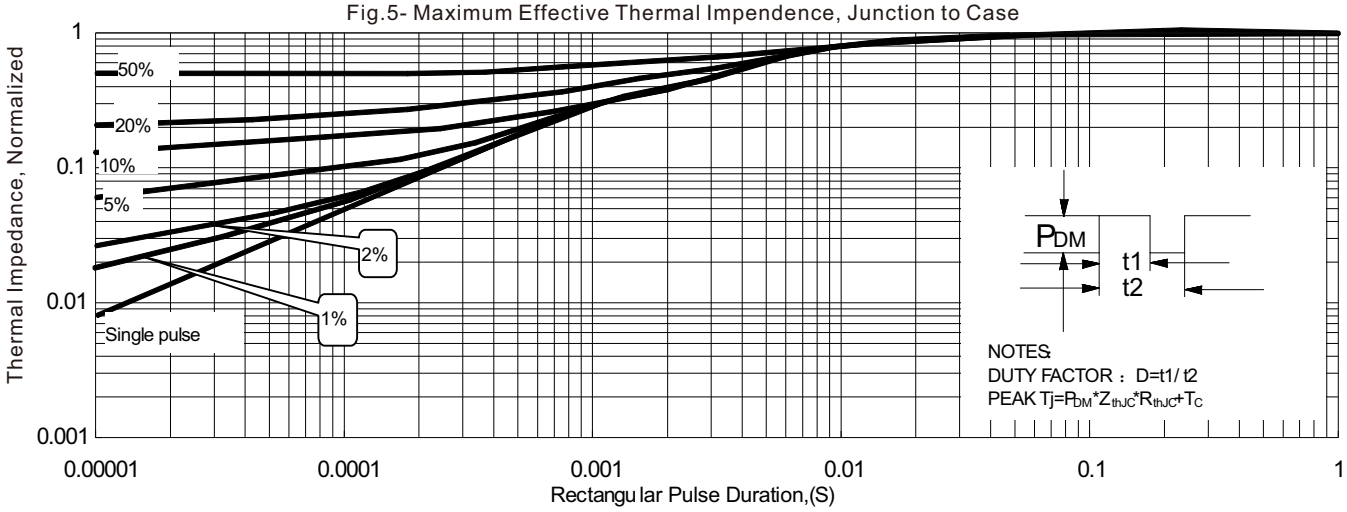

Document ID : DS-22M76
Revised Date : 2015/08/24
Revision : C

■ Rating and characteristic curves

Fig.6- Maximum Peak Current Capability

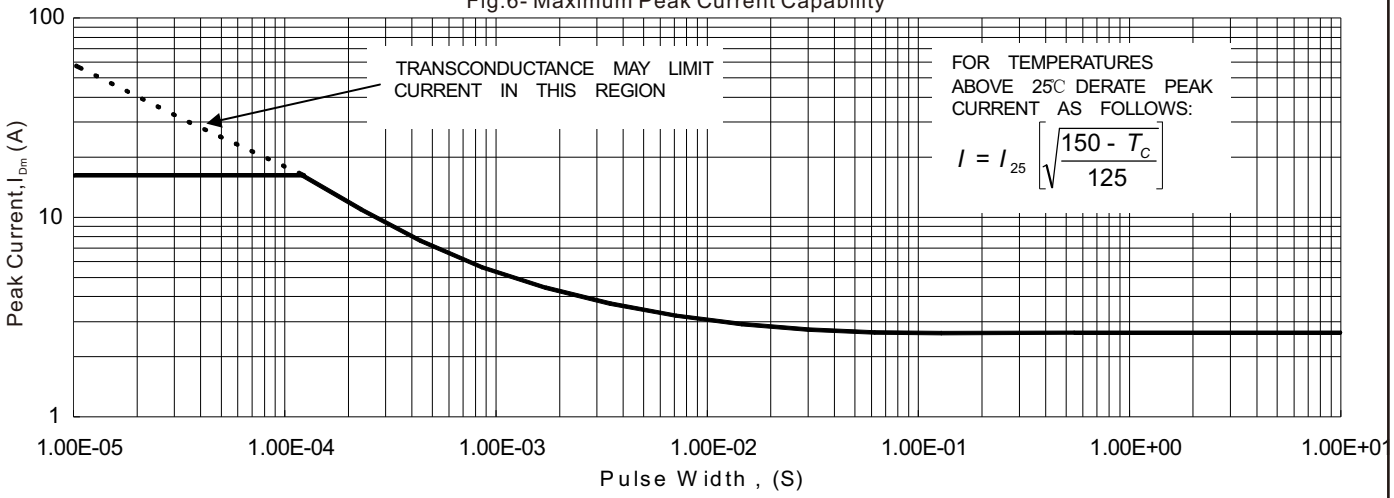

Fig.7- Typical Transfer Characteristics

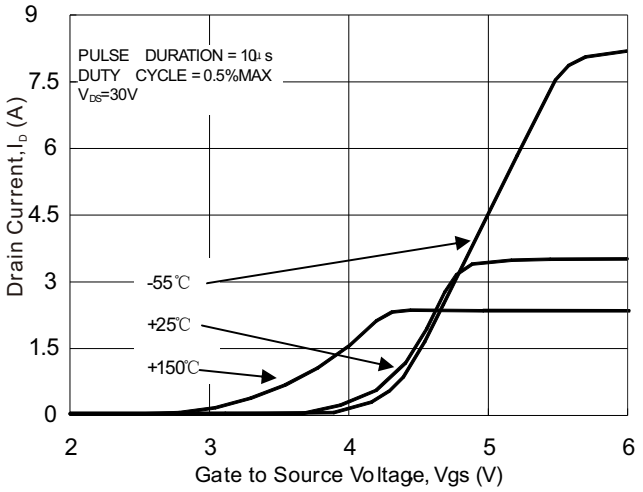

Fig.8- Typical Drain to Source ON Resistance vs Gate Voltage and Drain Current

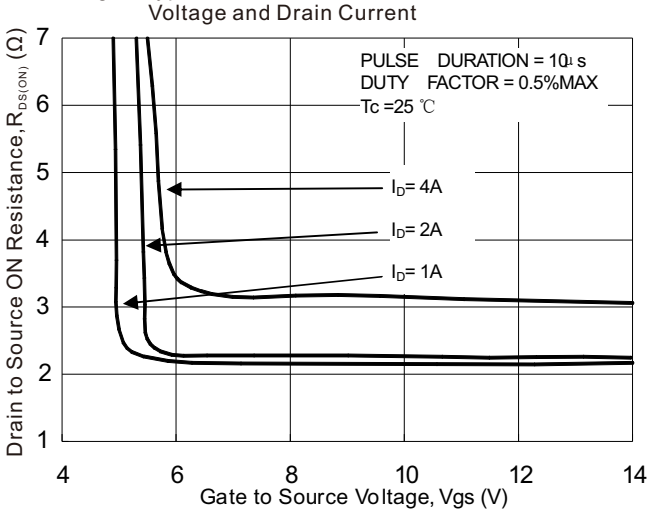

Fig.9- Typical Drain to Source ON resistance vs Drain Current

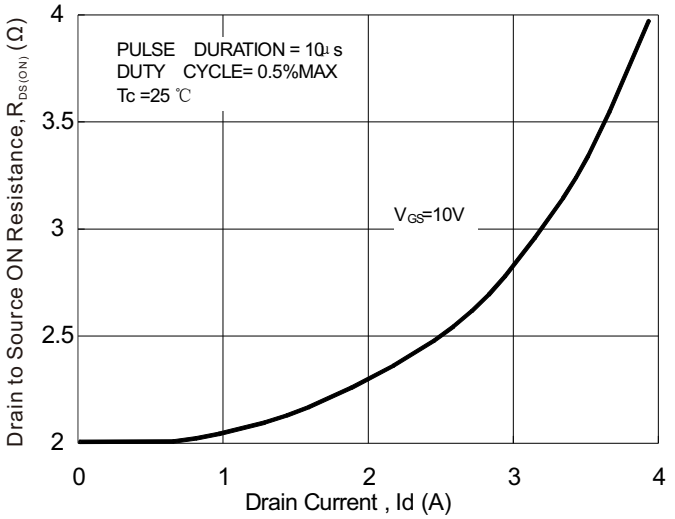

Fig.10- Typical Drain to Source ON resistance vs Junction Temperature

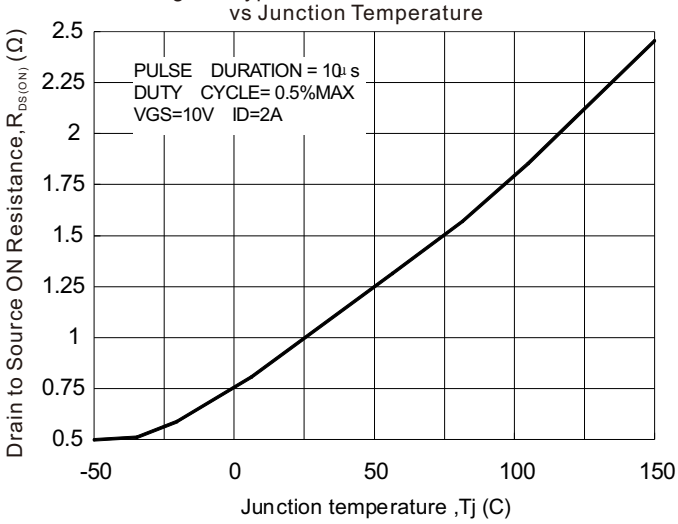

Document ID : DS-22M76
Revised Date : 2015/08/24
Revision : C

■ Rating and characteristic curves

Fig.11- Typical Threshold Voltage vs Junction Temperature

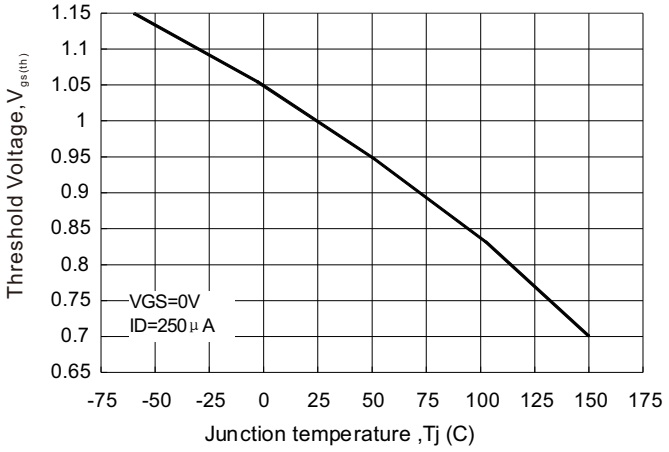

Fig.12- Typical Breakdown Voltage vs Junction Temperature

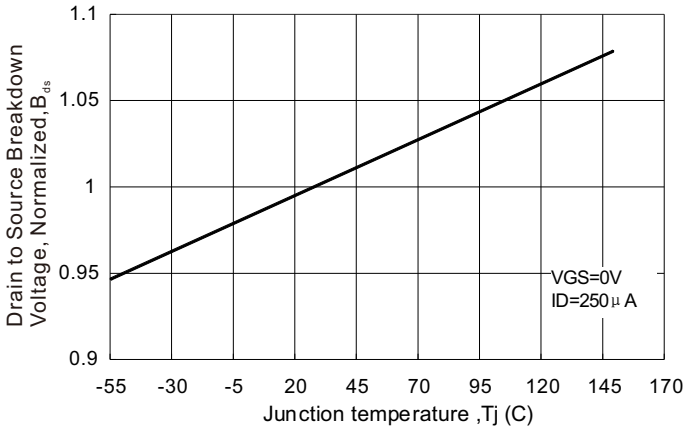

Fig.13- Typical Capacitance vs Drain to Source Voltage

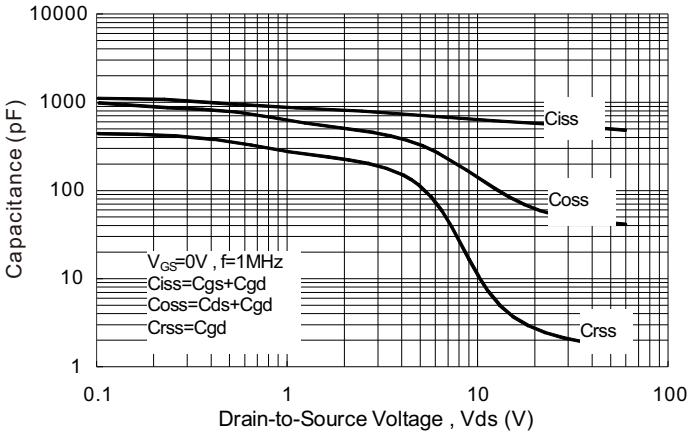

Fig.14- Typical Gate Charge vs Gate to Source Voltage

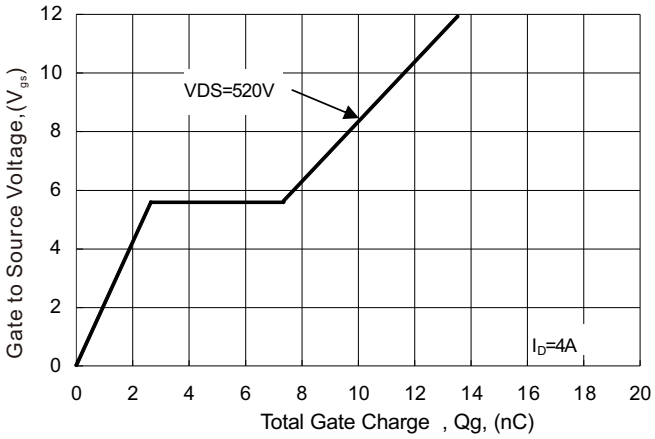

Fig.15- Typical Body Diode Transfer Characteristics

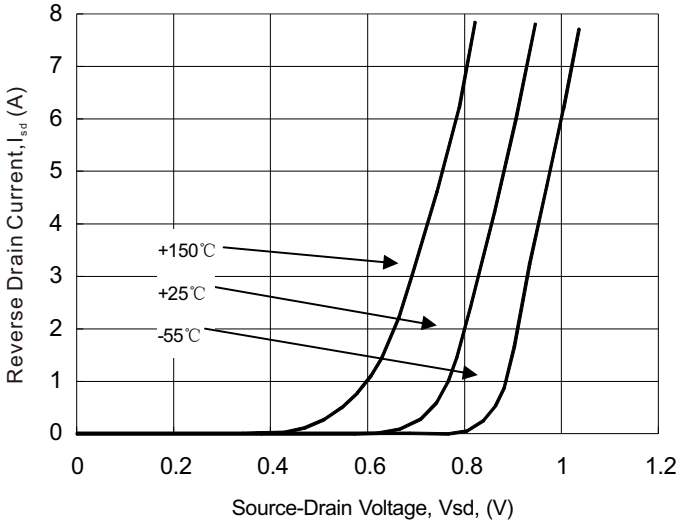

Fig.16- Unclamped Inductive Switching Capability

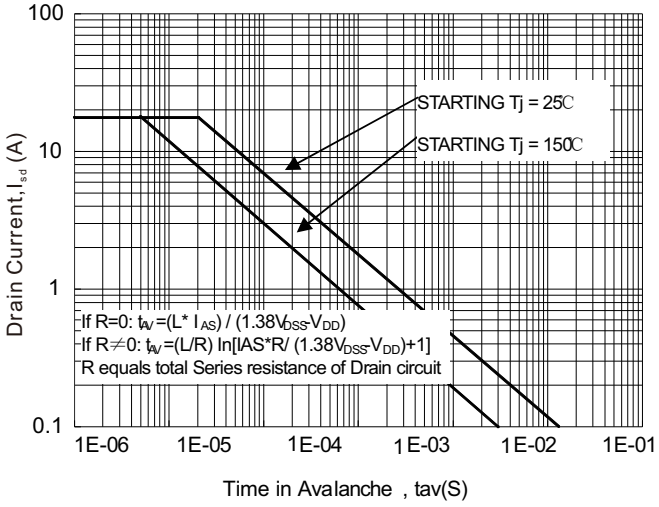

Document ID : DS-22M76
Revised Date : 2015/08/24
Revision : C

■ Test circuit and waveform

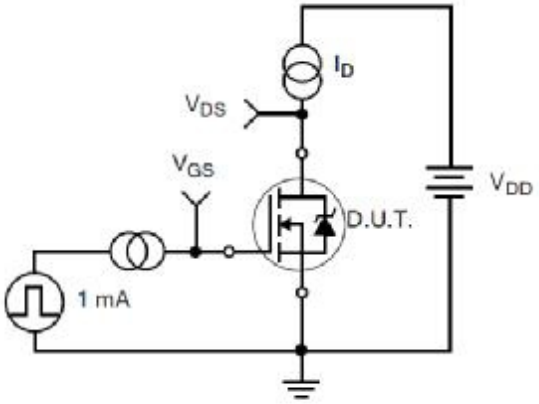

Figure 17. Gate Charge Test Circuit

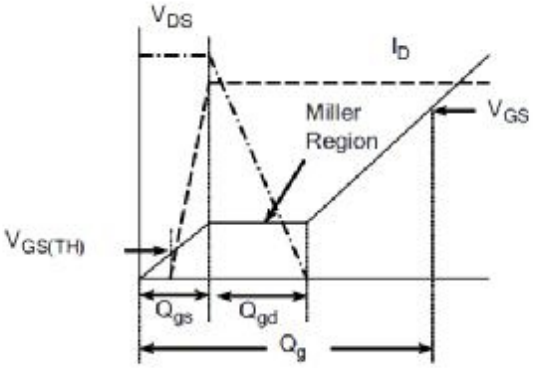

Figure 18. Gate Charge Waveform

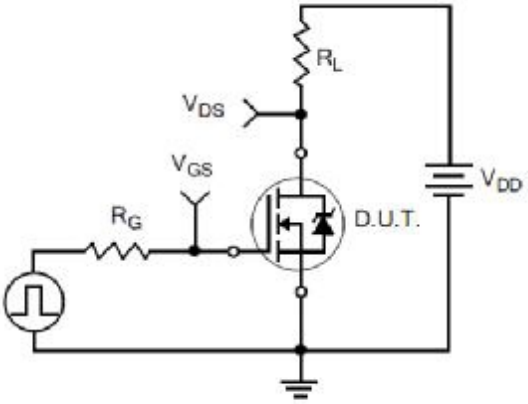

Figure 19. Resistive Switching Test Circuit

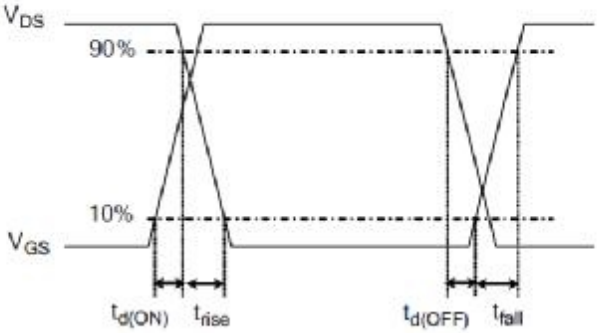

Figure 20. Resistive Switching Waveforms

■ Test circuit and waveform

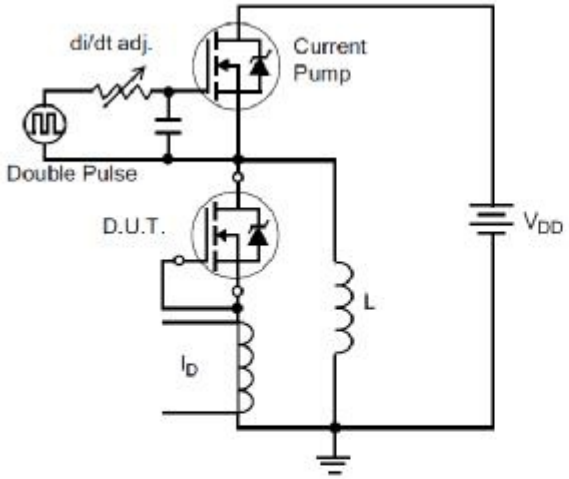

Figure 21. Diode Reverse Recovery Test Circuit

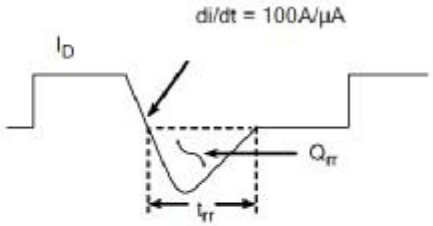

Figure 22. Diode Reverse Recovery Waveform

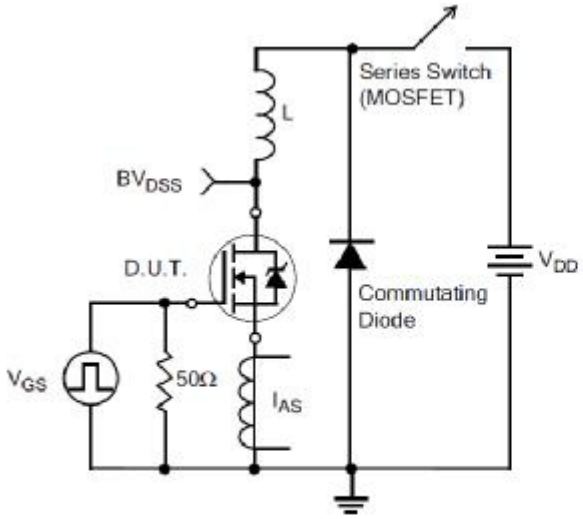

Figure 23. Unclamped Inductive Switching Test Circuit

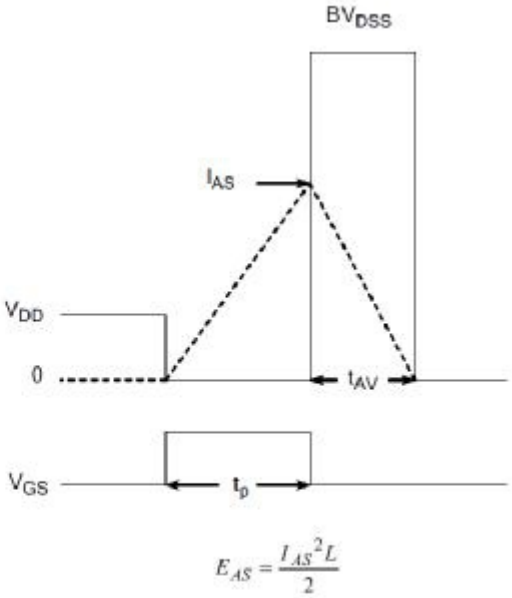

Figure 24. Unclamped Inductive Switching Waveforms

■ Package Information

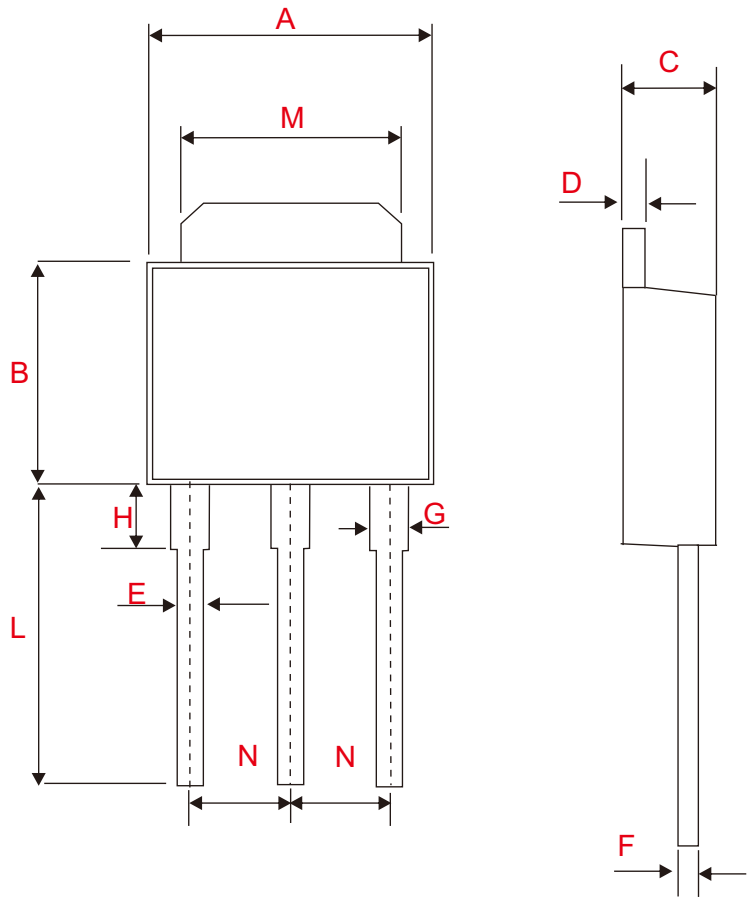

Item	Values (mm)	
	Min	Max
A	6.30	6.90
B	5.70	6.30
C	2.10	2.50
D	0.30	0.60
E	0.50	0.70
F	0.30	0.60
G	0.70	1.00
H	1.60	2.40
L	7.70	9.80
	6.00	6.30
	4.50	5.80
	2.10	3.70
M	5.10	5.50
N	2.09	2.49

TO-251 Package

Document ID : DS-22M76
Revised Date : 2015/08/24
Revision : C

The name and content of poisonous and harmful material in products

Parts Name	Hazardous Substance					
	Pb	Hg	Cd	Cr(VI)	PBB	PBDE
Limit	≤0.1%	≤0.1%	≤0.01%	≤0.1%	≤0.1%	≤0.1%
Lead Frame	○	○	○	○	○	○
Molding Compound	○	○	○	○	○	○
Chip	○	○	○	○	○	○
Wire Bonding	○	○	○	○	○	○
Solder	×	○	○	○	○	○
Note	○: means the hazardous material is under the criterion of SJ/T11363-2006. ×: means the hazardous material exceeds the criterion of SJ/T11363-2006. The plumbum element of solder exist in products presently, but within the allowed range of Eurogroup RoHS.					

Warnings

1. Exceeding the maximum ratings of the device in performance may cause damage to the device, even the permanent failure, which may affect the dependability of the machine. It is suggested to be used under 80 percent of the maximum ratings of the device.
2. When installing the heatsink, please pay attention to the torsional moment and the smoothness of the heatsink.
3. VDMOSFETs is the device which is sensitive to the static electricity, it is necessary to protect the device from being damaged by the static electricity when using it
4. This publication is made by CITC and subject to regular change without notice.

http://www.citcorp.com.tw/ Tel:886-3-5600628 Fax:886-3-5600636
Add:Rm. 3, 2F., No.32, Taiyuan St., Zhubei City, Hsinchu County 302, Taiwan (R.O.C.)

Document ID : DS-22M76
Revised Date : 2015/08/24
Revision : C

- CITC reserves the right to make changes to this document and its products and specifications at any time without notice.
- Customers should obtain and confirm the latest product information and specifications before final design, purchase or use.
- CITC makes no warranty, representation or guarantee regarding the suitability of its products for any particular purpose, nor does CITC assume any liability for application assistance or customer product design.
- CITC does not warrant or accept any liability with products which are purchased or used for any unintended or unauthorized application.
- No license is granted by implication or otherwise under any intellectual property rights of CITC.
- CITC products are not authorized for use as critical components in life support devices or systems without express written approval of CITC.

http://www.citcorp.com.tw/ Tel:886-3-5600628 Fax:886-3-5600636
Add:Rm. 3, 2F., No.32, Taiyuan St., Zhubei City, Hsinchu County 302, Taiwan (R.O.C.)

Document ID : DS-22M76
Revised Date : 2015/08/24
Revision : C